If a magnet fails to pass the Go-Nogo gauge test, repeat the test. If it fails again then immediately page Merrick Penicka (2-7726) and Leonard Morrison (2-5707). Their backups are P. Den Hartog (2-3722) and R.Bechtold (2-2906), respectively.

The completed test data sheet is to be delivered to R. Bechtold

Vacuum Chamber Clearances

	Sector	Girder 1	Girder 2	Girder 3	Girder 4	Girder 5
F	1					
A	2					
	3					
	4					
	5					
	6					
	7					
	8					
	9					
B	10					
	11					
	12					
	13					
	14					
	15					
	16					
	17					
C	18					
	19					
	20					
	21					
	22					
	23					
D	24					
	25					
	26					
	27					
	28					
	29					
E	30					
	31					
	32					
	33					
	34					
	35					
F	36					
	37					
	38					
	39					
	40					

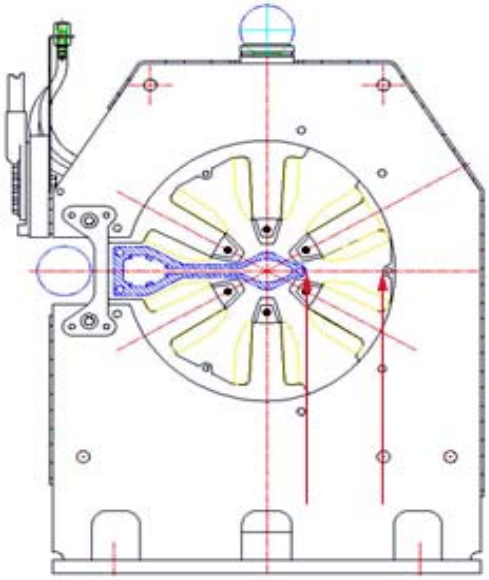

Sext.Gauge size:(Go) **4.979**" (Nogo) **5.147**"

Girder-2	Girder-4
AS2-AS3	BS3-BS2

The gage is to be inserted at the location marked by the red arrows

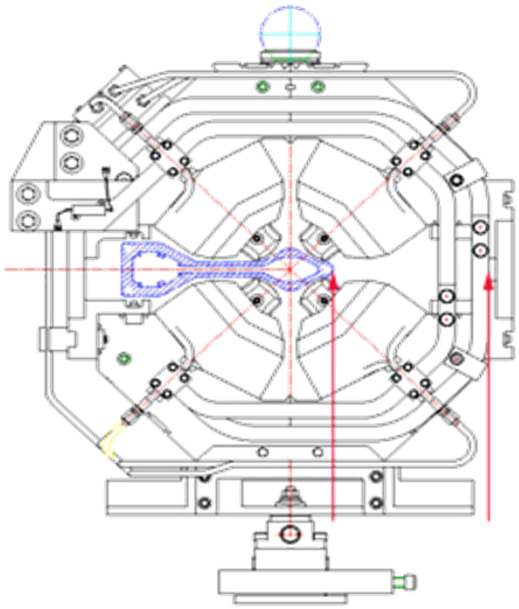

Quad.Gauge size:(Go) **9.624**"(Nogo) **9.792**"

Girder-1	Girder-3	Girder-5
AQ1-AQ3	AQ4-BQ4	BQ3-BQ1

Name:_____ Date:_____